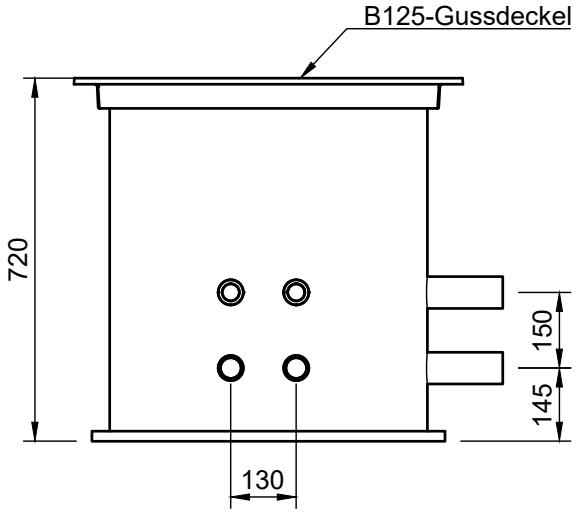

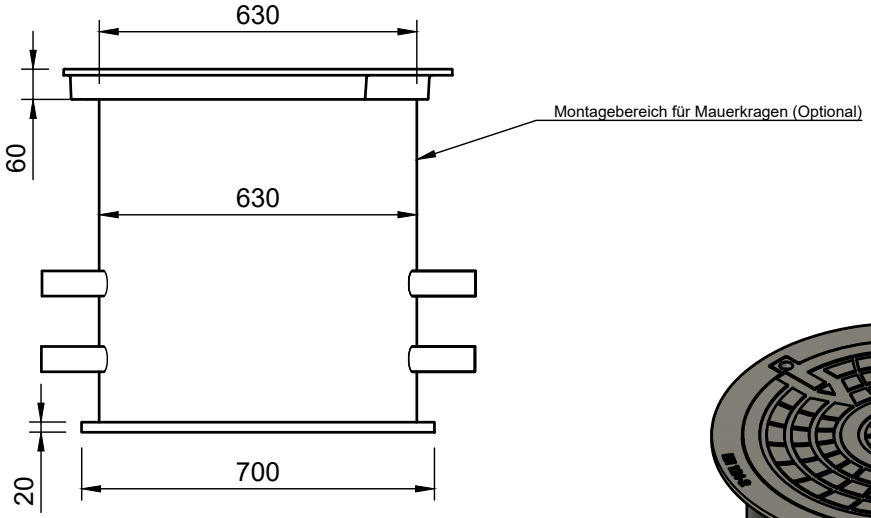

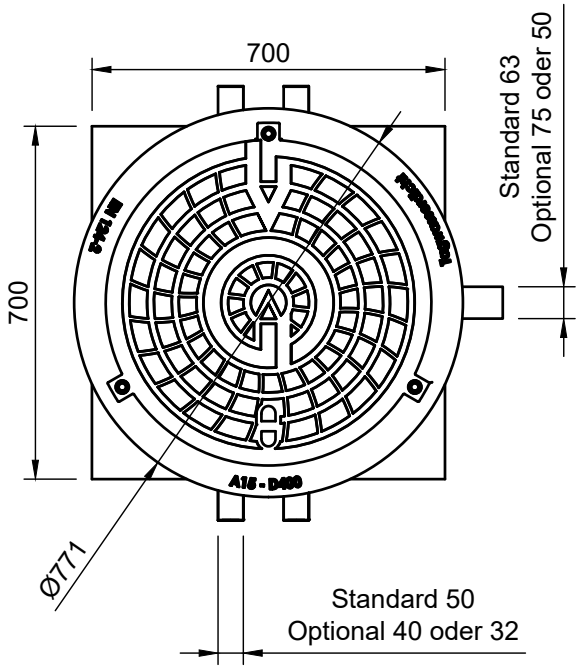

ECO600 blueline

- Korpus bis **5 mWs** Druckfest
- Mit B125-Gussdeckel, tagwasserdicht
- Standard: 2 bis 4-fach

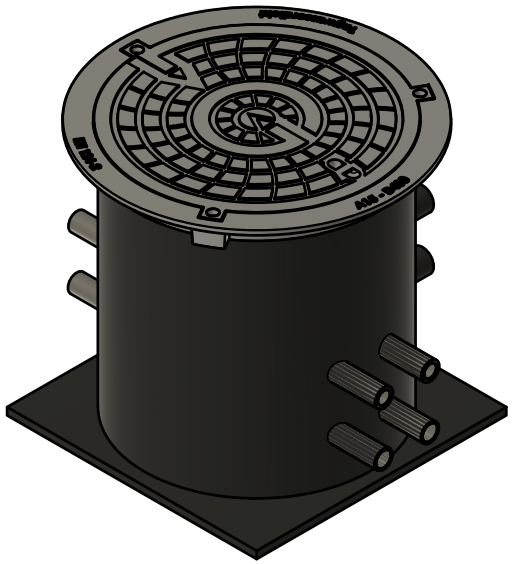

Dept.	Technical reference	Created by	Approved by
algeo		DA 03.12.2024	
		Document type	Document status
		Title: ECO600 blueline	DWG No. 2024-000785
			Rev. 1 / Date of issue 12.03.2024 / Sheet 1/1

algeo
Geothermal Pioneers